FIRST ANGLE PROJECTION

ALL DIMENSIONS ARE IN MM

DRAWING NO. IS-1-GA-708-101-M020

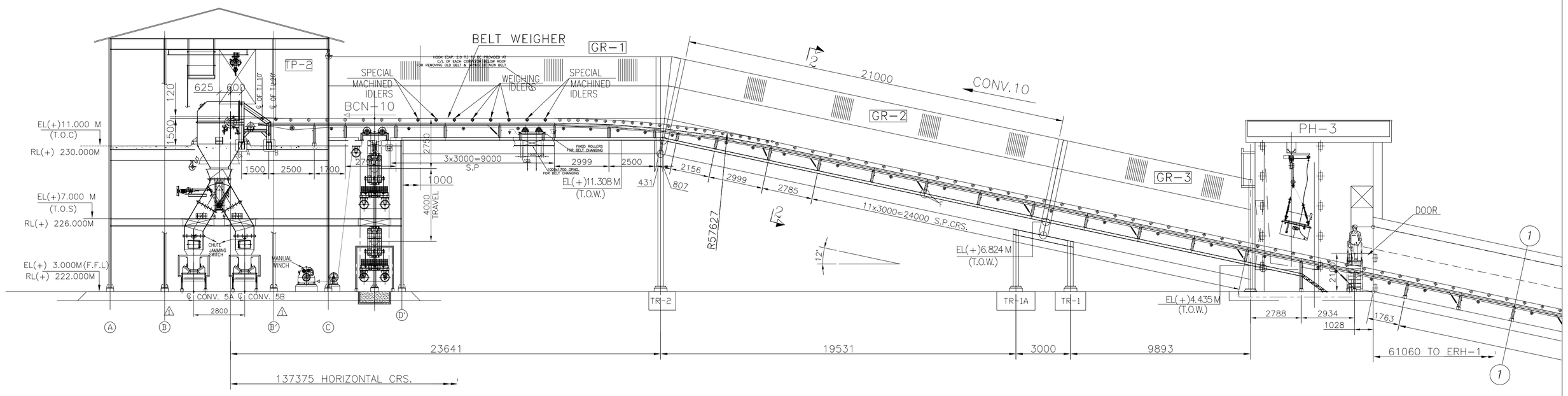

ELEVATION OF CONV.10

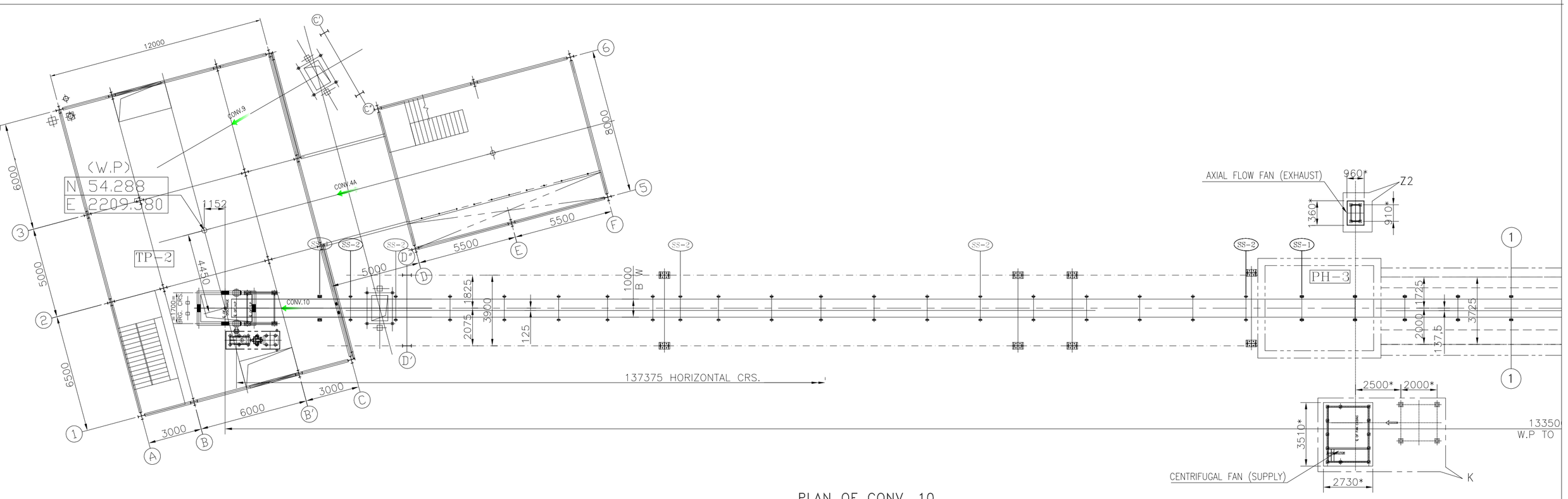

PLAN OF CONV. 10

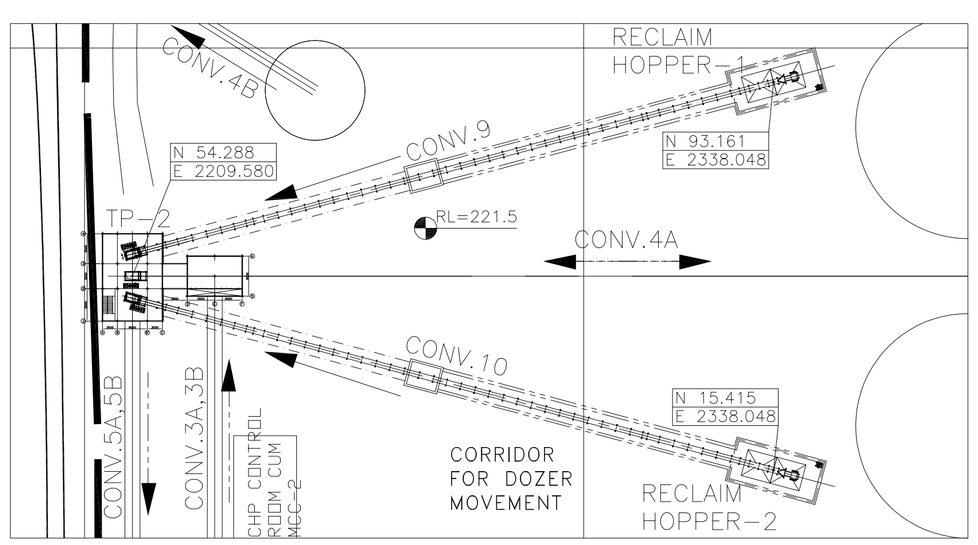

KEY PLAN

NOTES:-

1. ALL DIMENSIONS ARE IN MM & LEVELS ARE IN METERS.
2. ALL ELEVATIONS ARE REFERRED TO THE FINISHED GROUND FLOOR LEVEL OF POWER HOUSE BUILDING AS EL. 0.00 M WHICH CORRESPONDS TO RL.(+)219.0 M. ABOVE MEAN SEA LEVEL.
3. FINISH FLOOR LEVEL CORRESPONDS TO FFL OF TURBINE HALL BUILDING.
4. PLINTH LEVEL SHOWN IN THE DRAWING ARE 500MM ABOVE FGL. ALL OTHER LEVELS SHOWN ARE W.R.T PLINTH LEVEL.
5. THE DRIVE DIMENSIONS ARE INDICATIVE ONLY AS MARKED * & SHALL BE FINALIZED AFTER GETTING THE DRIVE COMPONENT DRGS.
6. GALLERY SUPPORTING TRESTLE TYPES AND TRESTLE LOCATIONS INDICATED IN THIS DRG. ARE TENTATIVE AND FINALLY THEY SHALL BE AS PER STRUCTURAL DRGS.
7. CIVIL REQUIREMENT INDICATED TENTATIVE.
8. CURB WALL BE PROVIDED AROUND ALL OPENINGS.
9. INSPECTION DOOR SHALL BE LEAK PROOF.
10. PLEASE REFER THIS DRG WITH SHEET 2 OF 5, 3 OF 5, 4 OF 5 & 5 OF 5.
11. (*) MARKED DIMENSIONS ARE UNDER HOLD.
12. (**) DURING CIVIL DESIGN COMBINED RAFT FOUNDATION SHALL BE TAKEN CARE IF REQD.
13. REQUIREMENT OF BRAKE SHALL BE DECIDED BASED ON COASTING TIME CALCULATION OF COMPLETE CIRCUIT
14. VENTILATION DUCT/OPNG DETAILS SHOWN ARE TENTATIVE & THE SAME SHALL BE AS PER APPD DUCT LAYOUT
15. ALL ROTATING PARTS SHALL BE COVERED WITH SUITABLE GUARDS.
16. THE BELT SPEED INDICATED IS NOMINAL SPEED & ACTUAL SPEED WILL BE MAINTAINED WITHIN ±5% OF NOMINAL SPEED
17. FOR THE HEAD END & DRIVE LOADS REFER THE GA & LOAD DATA OF TP-2; FOR TAIL END LOAD REFER GA & LOAD DATA OF ERH-2

REFERENCE DRAWINGS/DOCUMENTS

DRG. NO.	DESCRIPTION
IS-0-PL-708-100-M001	COAL FLOW DIAGRAM
IS-1-FL-708-100-M002	LAYOUT OF COAL HANDLING PLANT
IS-1-GA-708-100-M003	TYPICAL GALLERY CROSS-SECTIONS OF GALLERIES & TUNNELS
IS-1-GA-708-104-M023	MECHANICAL GA & LOAD DATA OF TP-2
IS-1-GA-708-104-M028	G.A OF EMERGENCY RECLAIM HOPPER (ERH-2)

LEGEND FOR CONVEYOR

⊕	CARRYING IDLER	C.I
	TRANSITION IDLER	T.I
	2 ROLL RETURN IDLER	R.I
●	FLAT RETURN IDLER	F.R.I
	IMPACT IDLER	I.I
	WEIGHING IDLER	W.I
	SPECIAL MACHD IDLER	S.M.I
	SELF CLEANING IDLER	S.C.I
	SELF ALIGNING CARRYING IDLER	S.A.C.I
	DEFLECTOR ROLLER	D.R
▲	PULL CHORD SWITCH	PCS
▌	BELT SWAY SWITCH	BSS
	ZERO SPEED SWITCH	ZSS
	WORKING POINT	W.P
	HEAD PULLEY	H.P
	TAIL PULLEY	T.P
	BEND PULLEY	B.P

REV	DATE	BRIEF RECORD	DRN	CHD	APP
1	31-3-17	REVISED AS PER MECON COMMENTS DATED-18-3-17	J.S	S.J	V.J

	TECHNICAL SPECIFICATION	QTY FOR EACH	MAKE
CONVEYOR IS:11592			
CONVEYOR NO/EQUIPMENT NO.	BCN-10	–	
RATED CAPACITY/DESIGN CAPACITY (T.P.H)	600/720	–	
BELT WIDTH (MM)/TROUGHING ANGLE	1000/35°	–	
VERTICAL LIFT (M)	21.300	–	
HORIZONTAL CRS. (M)	137.375 M	–	
PROFILE LENGTH (MM)	139.395 M	–	
ENDLESS BELT LENGTH (CONSIDERING SAG) (MM)	292.275M	–	
SPEED (M/SEC.)	3.2	–	
MATERIAL HANDLED			
MATERIAL	COAL	–	
BULK DENSITY FOR CONVEYOR SIZING (TON/CU.M)	0.8	–	
FOR STRUCTURAL DESIGN (TON/CU.M)	1.1	–	
LUMP SIZE (MM)	(–)20	–	
MOISTURE CONTENT	15%	–	
MATERIAL TEMP.	AMBIENT (MAX. 50°)	–	
BELT IS:1891			
TYPE	N/N HD, FR GRADE 1		
RATING	630/4	–	
TOP COVER THICKNESS (MM)	6	–	
BOTTOM COVER THICKNESS (MM)	3	–	
BELT TENSION (KN)	T1-48.96, T2-21.34;T1S-58.63, T2S-31.01 1	–	
TYPE OF JOINT	VULCANIZED	–	
DRIVE DETAILS – MOTOR			
TYPE	TEFC, IE2, IP55, TEMP RISE LIMIT:- CLASS-E, CLASS F INSULATION, CONT S1 DUTY	1 No.	
POWER RATING(KW)/RPM/FRAME SIZE	132	–	
SUPPLY VOLTAGE / DUTY	415V,3PHASE,50Hz	–	
DRIVE DETAILS – GEARBOX			
TYPE	BEVEL HELICAL	1 No.	
MODEL NO	B2-280 FAN COOLED/EQVLT		APPD MAKE
HOLD BACK	YES	–	
RATIO	15.7:1 (reqd)	–	
MECHANICAL RATING KW	–	–	APPD MAKE
DRIVE DETAILS – BRAKE			
TYPE	AS PER COASTING TIME CALCN	–	APPD MAKE
DRIVE DETAILS – COUPLING HIGH SPEED			
TYPE/SIZE	DELAYED FILL CHAMBER TYPE;SDFC-500/Eqvlt 1	1 No.	
RATING KW	RG-10/EQVLT	–	APPD MAKE
DRIVE DETAILS – COUPLING LOW SPEED			
TYPE/SIZE	GEARED	1 No.	
RATING KW/100 rpm	–	–	APPD MAKE
DRIVE DETAILS – TAKE UP			
TYPE	VGTU	–	
TRAVEL (MM)	4000	–	
COUNTER WEIGHT (IN KG)	5000	–	
PULLEYS (IS:8531) – DIAMETER MM/NOS.			
DRIVE	ø654	1 No.	
TAIL	ø520	1 No.	
TAKE-UP	ø520	1 No.	
BEND	ø420	2 Nos.	
SNUB	ø420	1 No.	
PULLEYS – LAGGING THK.MM			
DRIVE PULLEY	12 MM SHORE, DIAMOND GROOVE	–	
ALL OTHER PULLEYS	10 MM PLAIN NATURAL RUBBER	–	
IDLERS (IS:8598), CARRYING			
3 ROLL 10° TRANSITION IDLERS	ø139.7 ERW x5.4THK. MS PIPE	2 Nos.	
3 ROLL 20° TRANSITION IDLERS	ø139.7 ERW x5.4THK. MS PIPE	2 Nos.	
3 ROLL 35° CARRYING IDLERS	ø139.7 ERW x5.4THK. MS PIPE	124 Nos.	
3 ROLL 35° IMPACT IDLERS	ø139.7 ERW x5.4THK. MS PIPE, OD ø 205	12 Nos.	
3 ROLL 35° SELF ALIGNING CARRYING IDLERS	ø139.7 ERW x5.4THK. MS PIPE	9 Nos.	
3 ROLL 35° WEIGHING IDLERS	ø139.7 ERW x5.4THK. MS PIPE	4 Nos.	
3 ROLL 35° SPECIAL MACHINED IDLERS	ø139.7 ERW x5.4THK. MS PIPE	4 Nos.	
IDLERS – RETURN			
1 ROLL RETURN IDLER	ø139.7 ERW x5.4THK. MS PIPE	41 Nos.	
1 ROLL SELF ALIGNING RETURN IDLER	ø139.7 ERW x5.4THK. MS PIPE	5 Nos.	
1 ROLL SELF CLEANING RETURN IDLER	ø139.7 ERW x5.4THK. MS PIPE	3 Nos.	
DEFLECTOR ROLLER	ø219+6MM THK. MS PLATE	1 No.	
MISCELLANEOUS INFORMATIONS			
INTERNAL SCRAPPER TYPE	V-PLOUGH TYPE	1 No.	
EXTERNAL SCRAPER TYPE – PRIMARY	PRIMARY WITH MULTI BLADE SPRUNG TYPE	1 No.	
EXTERNAL SCRAPER TYPE – SECONDARY	SECONDARY WITH TORSION ARM	1 No.	
SKIRT BOARD	11.5M (10mm MS mother plate with10mm TISCRAL with 3mm MS cover)with 20mm rubber curtains of 55A shore hardness 1	1 EACH	
DECK PLATE	3.15MM THK. MS THROUGHOUT	1 LOT.	
HEAD FRAME, TAIL FRAME & DRIVE BASE FRAME	ROLLED SECTION	1 EACH	
BEND FRAME	ROLLED SECTION	1 EACH	
STRINGER	ISMC-150	1 LOT	
SHORT SUPPORT	ISMC-125	1 LOT	
DISCHARGE CHUTE	20mm thk TISCRAL/SALHARD on sliding zone & 10mm thk MS plate on non sliding zone	1 LOT	
SEAL PLATE	12 GAUGE	XXX NO.	
SAFETY SWITCHES			
PULL CORD SWITCH /LOCATION	25 M SPACING	6 PAIRS.	
BELT SWAY SWITCH/LOCATION	50 M SPACING	4 PAIRS.	
ZERO SPEED SWITCH/LOCATION	ONE FOR EACH CONVEYOR MOUNTED AT TAIL PULLEY	1 NO.	
CHUTE BLOCK SWITCH		1 NO.	

ONE CONVEYOR QTY. INDICATED

PROJECT : ROURKELA PP-II EXPANSION PROJECT (1X250 MW)

OWNER: NTPCL — NTPC-SAIL POWER COMPANY PVT. LTD.

CONSULTANT: MECON LIMITED मेकॉन लिमिटेड

BHARAT HEAVY ELECTRICALS LTD INDUSTRIAL SYSTEMS GROUP, BANGALORE

	NAME	SIGN	DATE
DRN.	R.S		12-1-17
DESN.	S.J		13-1-17
CHD.	RSP		14-1-17
APP.	VSD		15-1-17

NO. OF VAR

TITLE : GA AND LOAD DATA OF BCN-10

NO. OF SHEETS: 05

SHEET. NO. 01

REV. 1

SCALE | BHEL JOB NO. | BHEL-ISG DRG. NO.: IS-1-GA-708-101-M020

SIZE-A1

Apr 03, 2017 – 6:39pm

FORMAT SIZE A1

COPY RIGHT AND CONFIDENTIAL
The information contained in this document is the property of BHARAT HEAVY ELECTRICALS LIMITED it must not be used directly or indirectly in any way detrimental to the interest of the company.

CAD FILE NAME: E:\NSPCL_RSP\BASIC ENGG\GA OF CONVEYORS\CONV 10\R01\GA & LOAD DATA

FIRST ANGLE PROJECTION

ALL DIMENSIONS ARE IN MM

DRAWING NO. IS-1-GA-708-101-M020

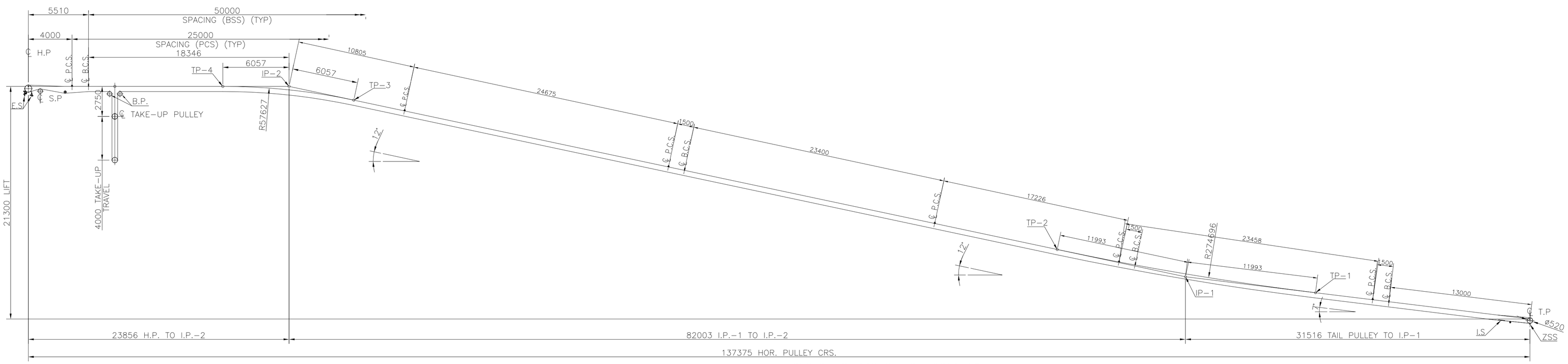

SWITCHES PROFILE OF CONV.10

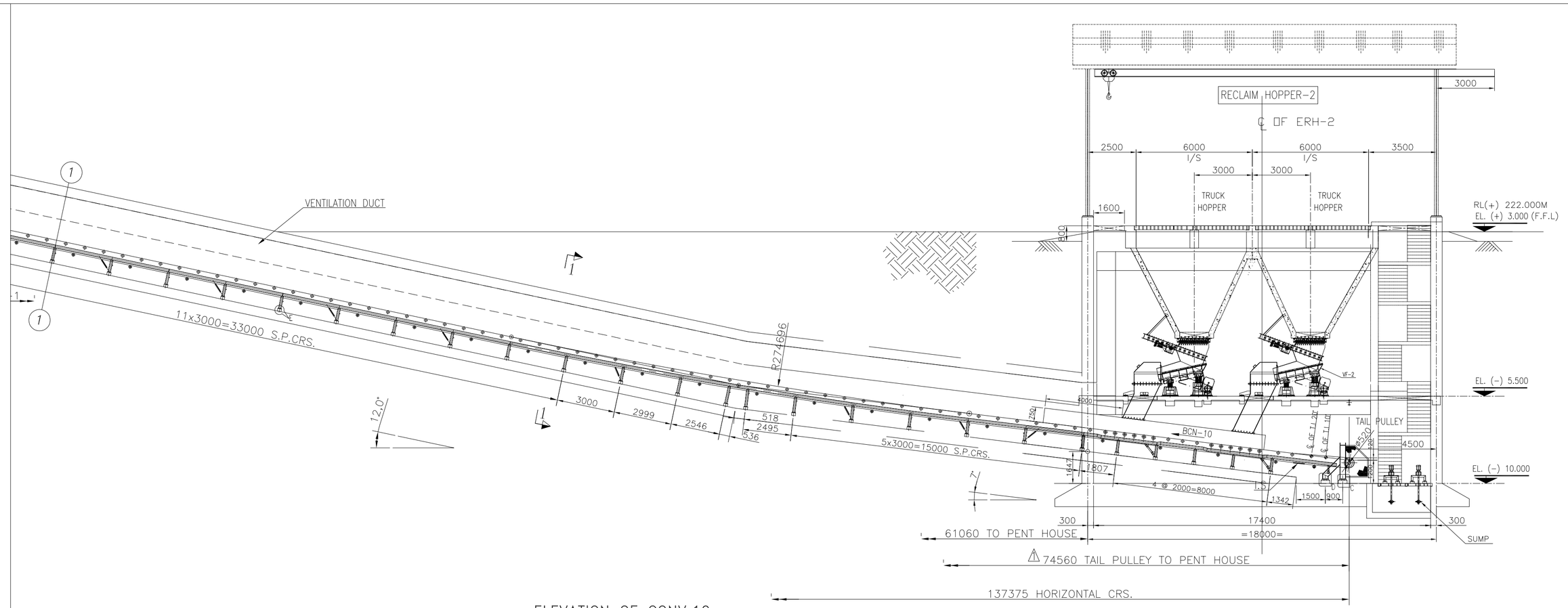

ELEVATION OF CONV.10

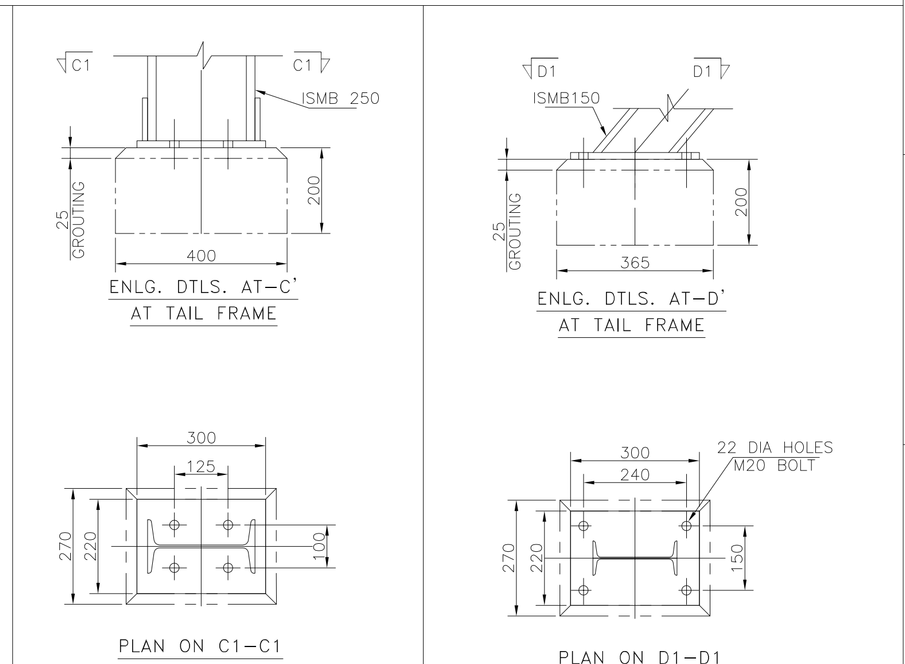

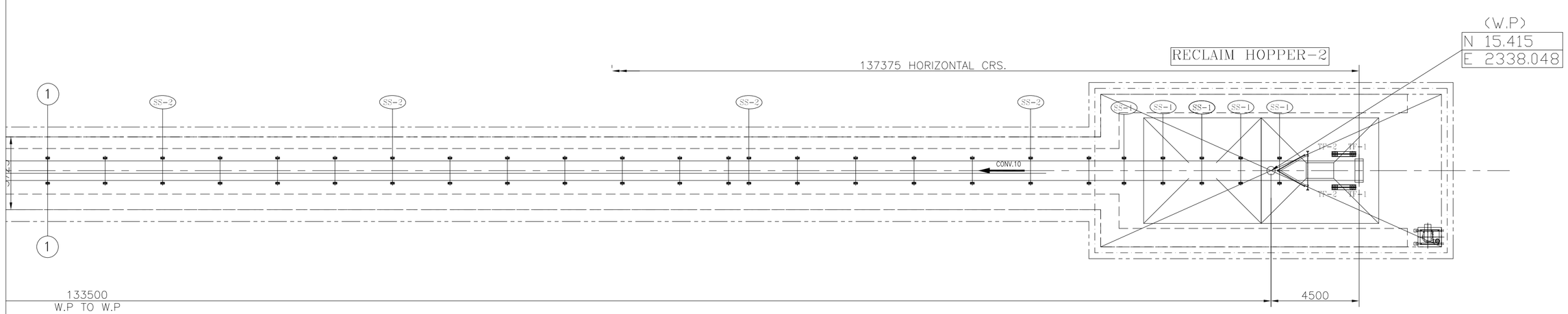

PLAN OF CONV. 10

NOTES:-

1. ALL DIMENSIONS ARE IN MM & LEVELS ARE IN METERS.
2. READ THIS DRG IN CONJUNCTION WITH SHEET 1 OF 4, 3 OF 4, 4 OF 4 & 5 OF 5.

REV	DATE	BRIEF RECORD	DRN	CHD	APP
1	31-3-17	REVISED AS PER MECON COMMENTS DATED-18-3-17	J.S	S.J	V.J

PROJECT :	ROURKELA PP-II EXPANSION PROJECT (1X250 MW)			
OWNER: NTPCL	NTPC-SAIL POWER COMPANY PVT. LTD.			
CONSULTANT: MECON	MECON LIMITED मेकॉन लमिटिड			
BHEL Maharatna Company	BHARAT HEAVY ELECTRICALS LTD INDUSTRIAL SYSTEMS GROUP, BANGALORE	NAME / SIGN / DATE: DRN. R.S 12-1-17; DESN. S.J 13-1-17; CHD. RSP 14-1-17; APP. VSD 15-1-17	NO. OF VAR	
	TITLE : GA AND LOAD DATA OF BCN-10	NO. OF SHEETS 05	SHEET. NO. 02	
SCALE	BHEL JOB NO.	BHEL-ISG DRG. NO.: IS-1-GA-708-101-M020	REV. 1	

SIZE-A1

Apr 03, 2017 - 6:38pm

FORMAT SIZE A1

COPY RIGHT AND CONFIDENTIAL
The information contained in this document is the property of BHARAT HEAVY ELECTRICALS LIMITED it must not be used directly or indirectly in any way detrimental to the interest of the company.

CAD FILE NAME: E:\NSPCL_RSP\BASIC ENGG\GA OF CONVEYORS\CONV 10\R01\GA & LOAD DATA

FIRST ANGLE PROJECTION

ALL DIMENSIONS ARE IN MM

DRAWING NO. IS-1-GA-708-101-M020

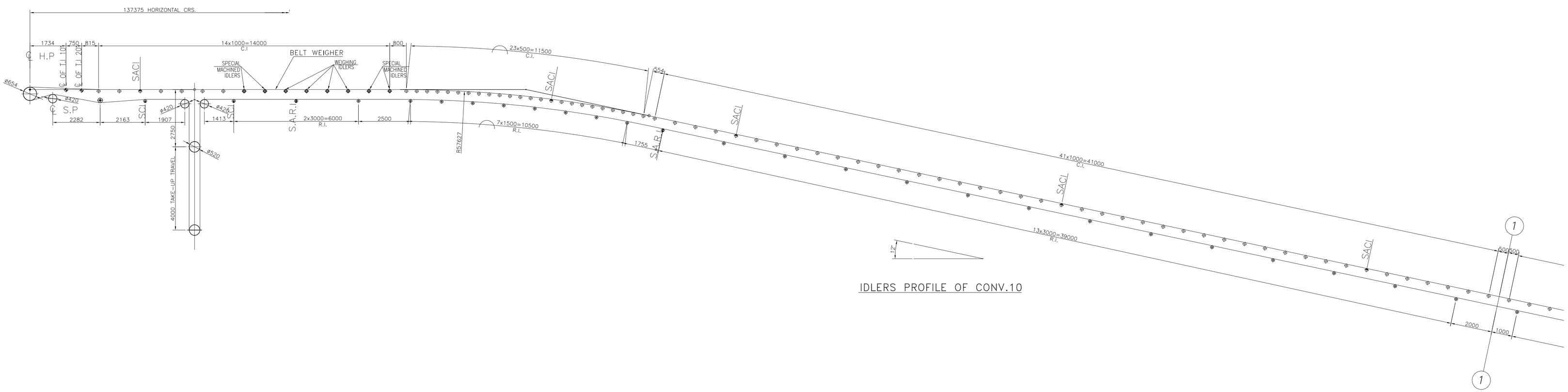

IDLERS PROFILE OF CONV.10

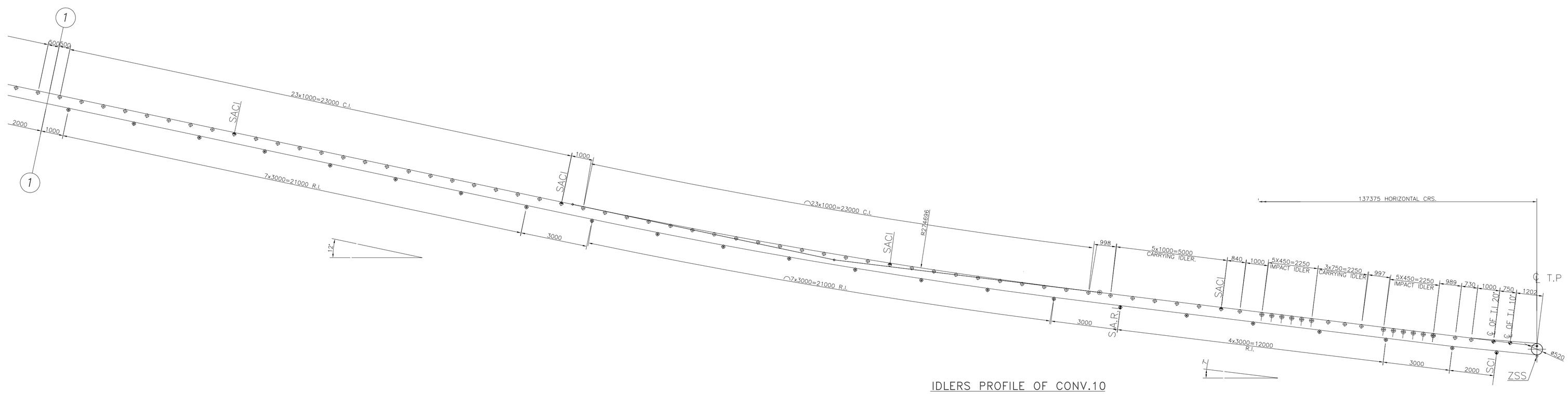

IDLERS PROFILE OF CONV.10

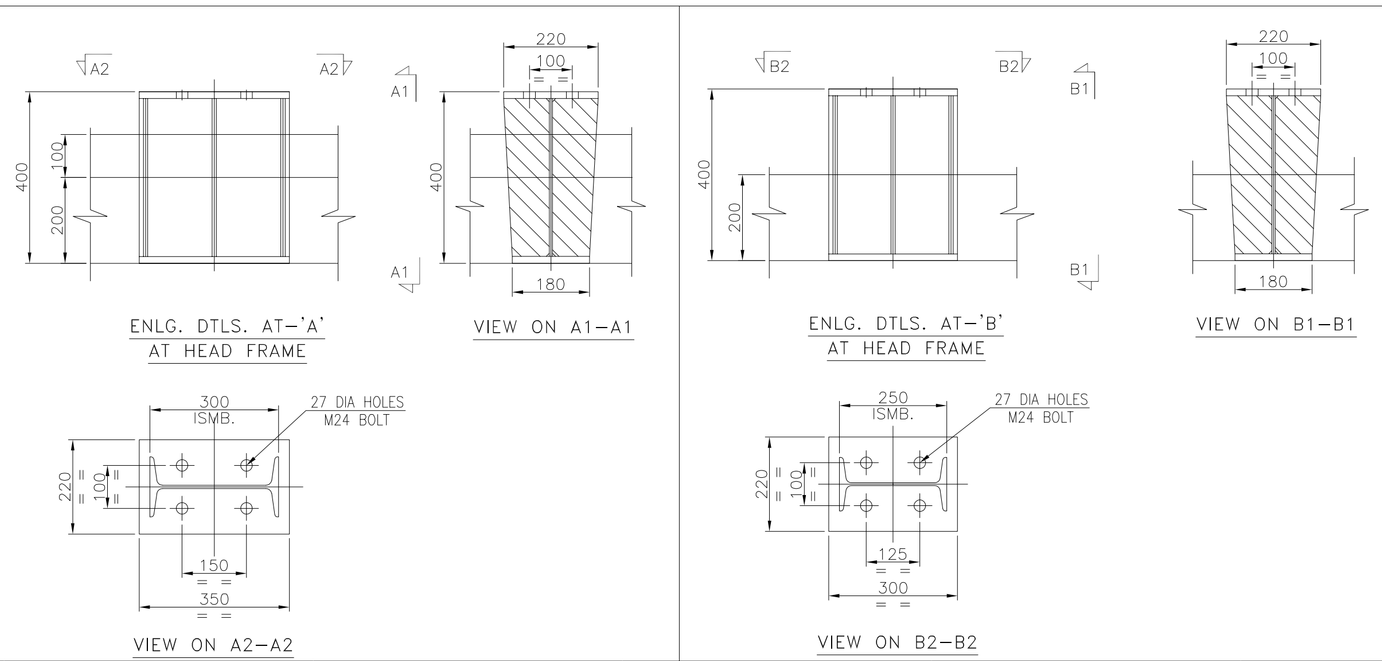

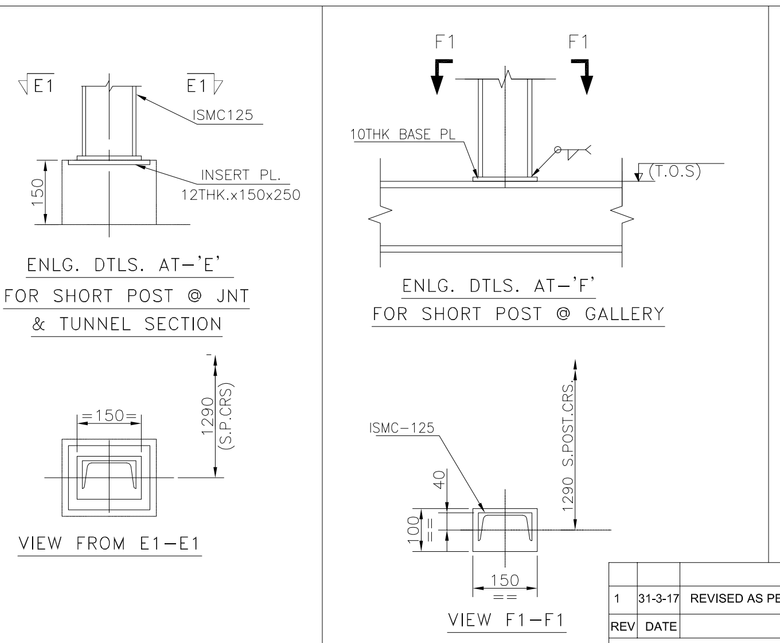

NOTES:-

1. ALL DIMENSIONS ARE IN MM & LEVELS ARE IN METERS.
2. READ THIS DRG IN CONJUNCTION WITH SHEET 1 OF 4, 2 OF 4, 4 OF 4 & 5 OF 5.

REV	DATE	BRIEF RECORD	DRN	CHD	APP
1	31-3-17	REVISED AS PER MECON COMMENTS DATED-18-3-17	J.S	S.J	V.J

PROJECT :	ROURKELA PP-II EXPANSION PROJECT (1X250 MW)			
OWNER: NTPCL	NTPC-SAIL POWER COMPANY PVT. LTD.			
CONSULTANT	MECON LIMITED मेकॉन लिमिटेड			
BHEL Maharatna Company	BHARAT HEAVY ELECTRICALS LTD INDUSTRIAL SYSTEMS GROUP, BANGALORE	DRN. R.S 12-1-17; DESN. S.J 13-1-17; CHD. RSP 14-1-17; APP. VSD 15-1-17	NO. OF VAR	
	TITLE : GA AND LOAD DATA OF BCN-10	NO. OF SHEETS	05	
		SHEET. NO.	03	
SCALE	BHEL JOB NO.	BHEL-ISG DRG. NO.: IS-1-GA-708-101-M020	REV. 1	

SIZE-A1

Apr 03, 2017 - 6:38pm

FORMAT SIZE A1

CAD FILE NAME: E:\NSPCL_RSP\BASIC ENGG\GA OF CONVEYORS\CONV 10\R01\GA & LOAD DATA

COPY RIGHT AND CONFIDENTIAL

The information contained in this document is the property of BHARAT HEAVY ELECTRICALS LIMITED it must not be used directly or indirectly in any way detrimental to the interest of the company.

FIRST ANGLE PROJECTION

ALL DIMENSIONS ARE IN MM

DRAWING NO. IS-1-GA-708-101-M020

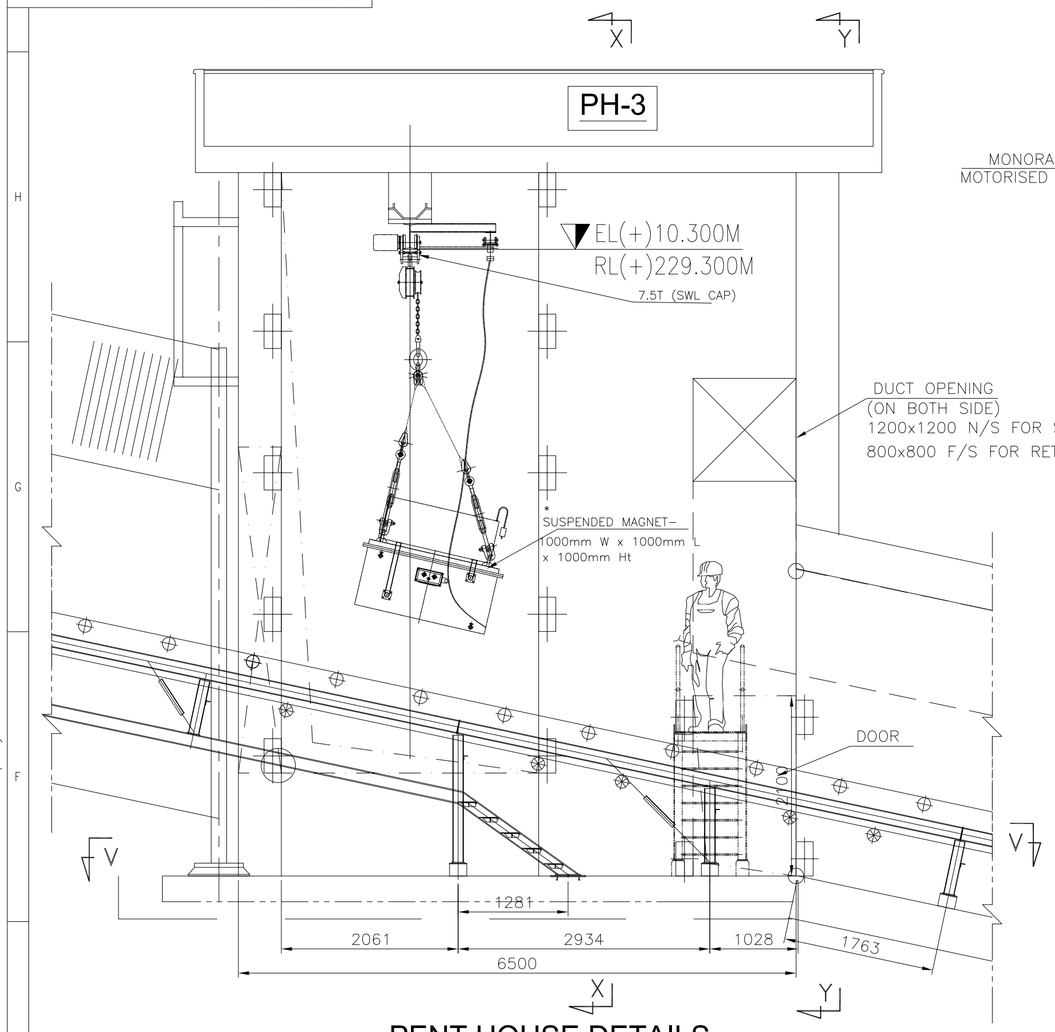

PENT HOUSE DETAILS

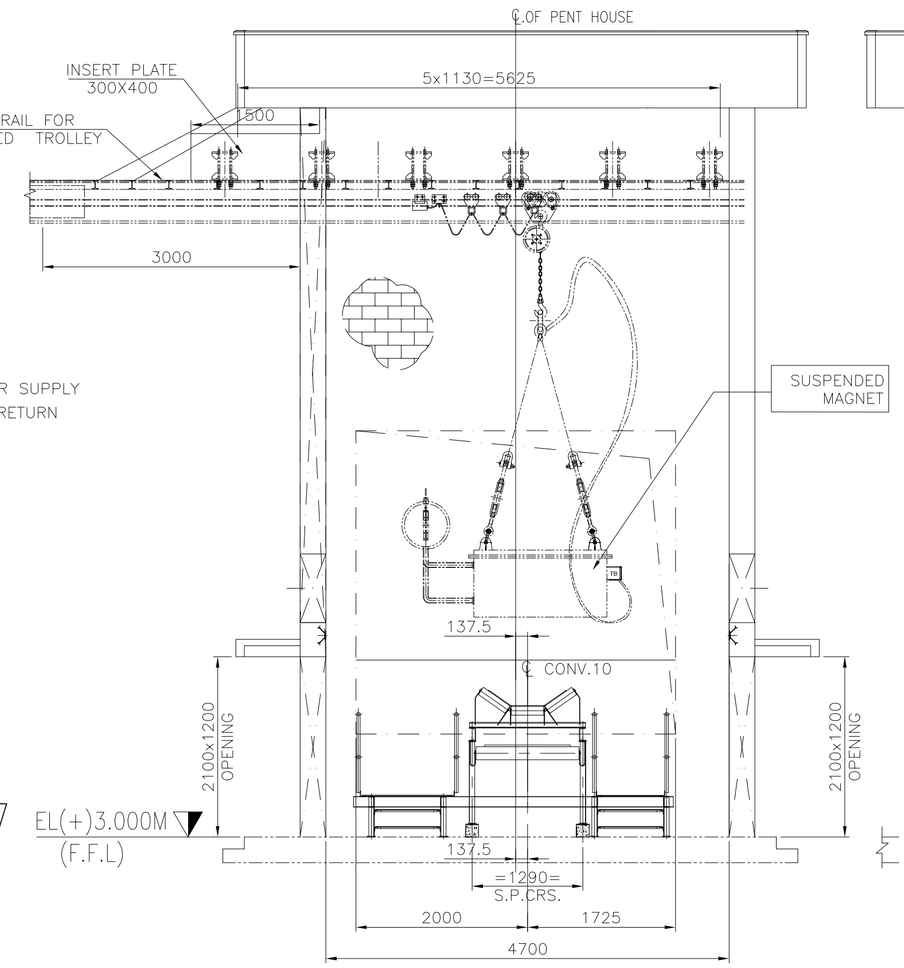

VIEW - X-X

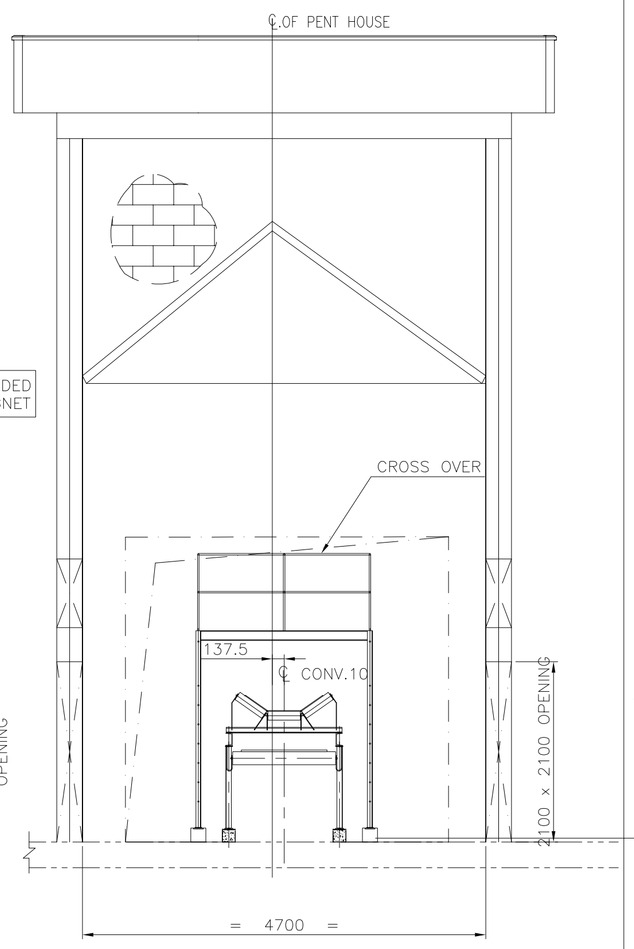

VIEW - Y-Y

CROSS OVER

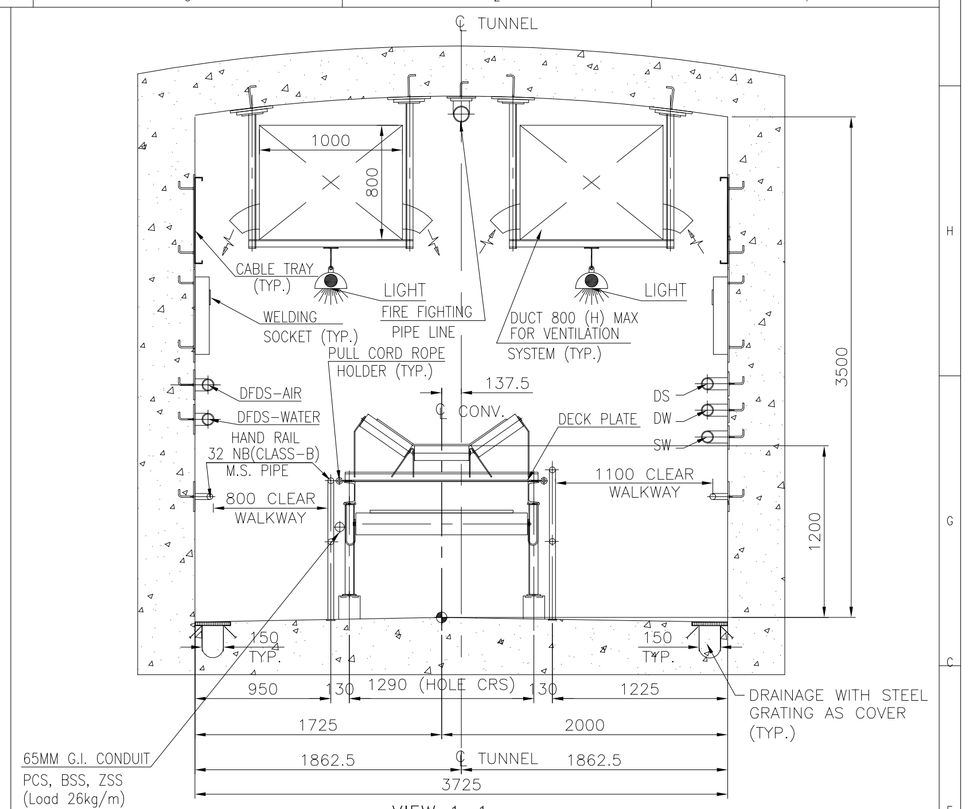

VIEW 1–1

TUNNEL CROSS SECTION

(LOOKING FROM HEAD END SIDE)

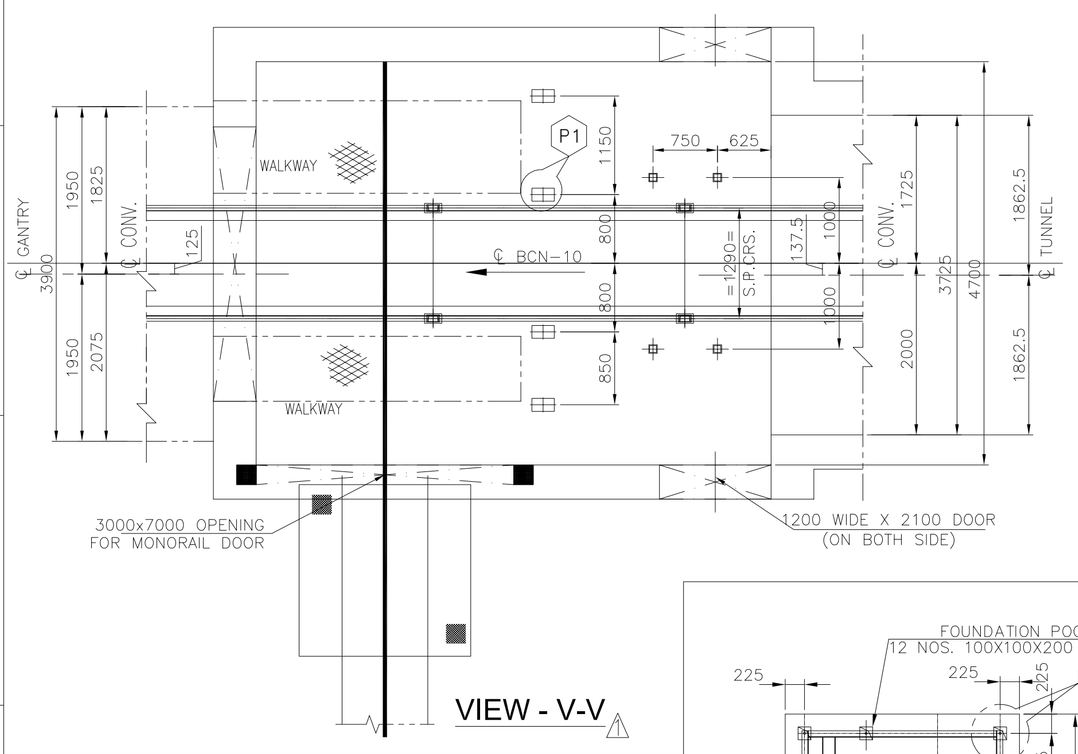

VIEW - V-V

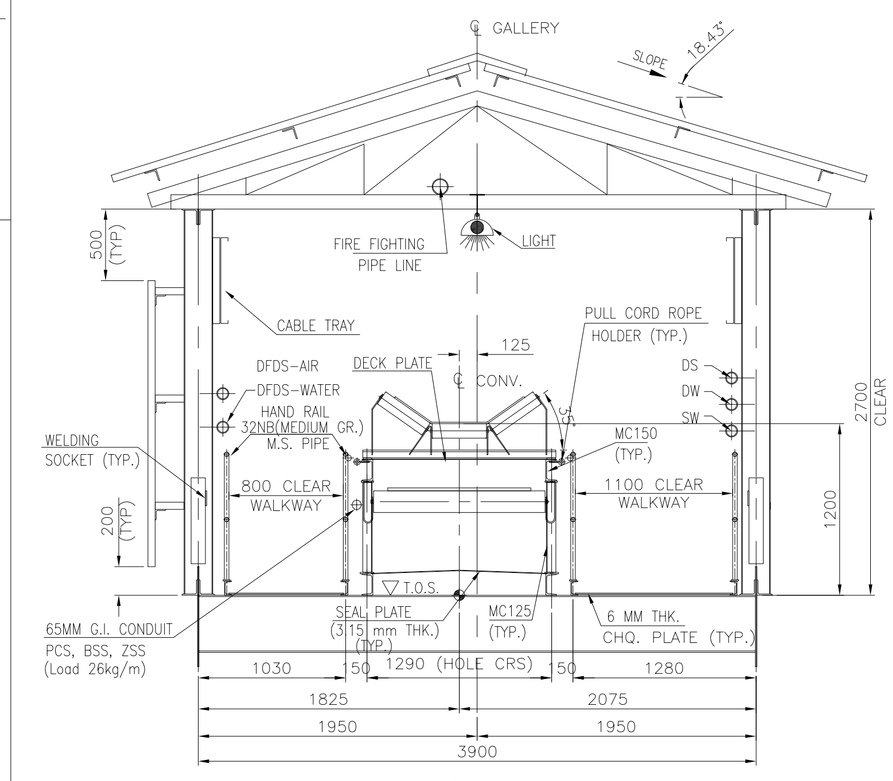

VIEW 2–2

TYPICAL GALLERY CROSS SECTION

(LOOKING FROM HEAD END SIDE)

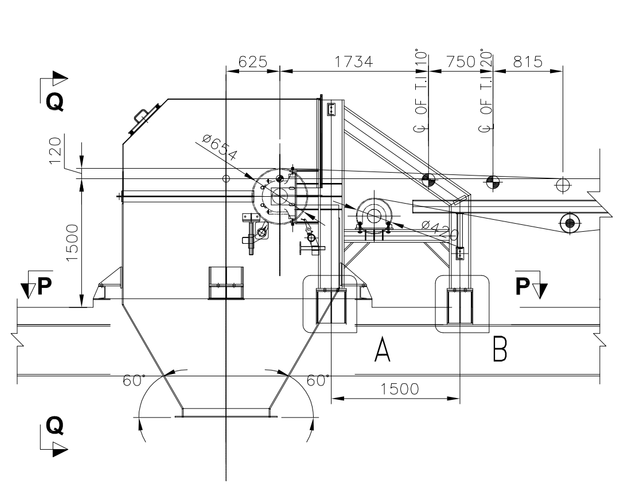

ENLG. DTLS. OF HEAD FRAME

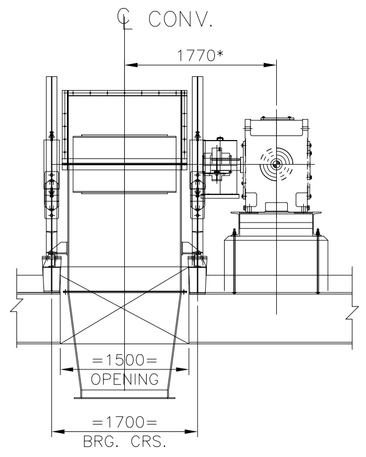

VIEW Q–Q

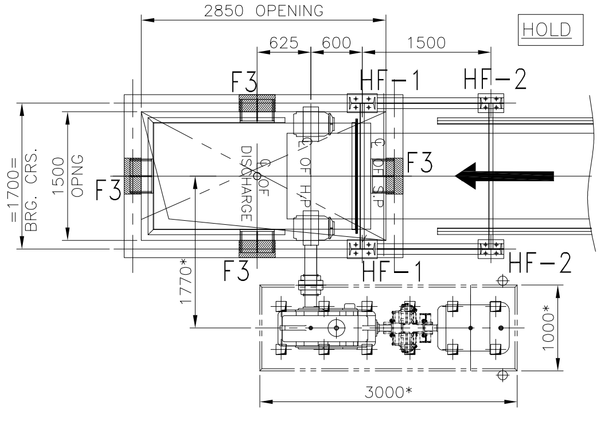

VIEW P–P

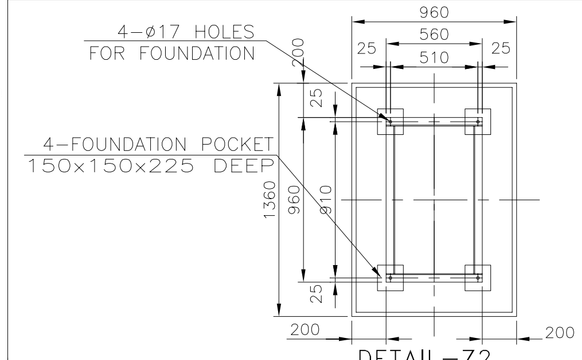

DETAIL–Z2

FOUNDATION PLAN FOR EXHAUST AIR

AXIAL FLOW FAN

STATIC LOAD WITH MOTOR–180 KGS
DYNAMIC LOAD–288 KGS

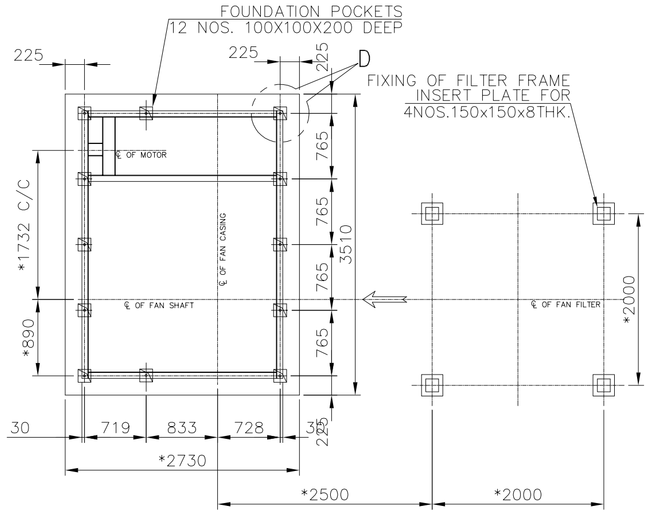

DETAIL - K

FOUNDATION PLAN FOR SUPPLY AIR FAN & FILTER

HOLD

NOTES:–

1. ALL DIMENSIONS ARE IN MM & LEVELS ARE IN METERS.
2. READ THIS DRG IN CONJUNCTION WITH SHEET 1 OF 5, 2 OF 5, 3 OF 5 & 5 OF 5.

REV	DATE	BRIEF RECORD	DRN	CHD	APP
1	31-3-17	REVISED AS PER MECON COMMENTS DATED-18-3-17	J.S	S.J	V.J

PROJECT : ROURKELA PP-II EXPANSION PROJECT (1X250 MW)

OWNER: NTPCL — NTPC-SAIL POWER COMPANY PVT. LTD.

CONSULTANT: MECON LIMITED मेकॉन लिमिटेड

BHARAT HEAVY ELECTRICALS LTD
INDUSTRIAL SYSTEMS GROUP,
BANGALORE

	NAME	SIGN	DATE
DRN.	R.S		12-1-17
DESN.	S.J		13-1-17
CHD.	RSP		14-1-17
APP.	VSD		15-1-17

NO. OF VAR

TITLE : GA AND LOAD DATA OF BCN–10

NO. OF SHEETS: 05

SHEET. NO.: 04

SCALE

BHEL JOB NO.

BHEL-ISG DRG. NO.: IS–1–GA–708–101–M020

REV. 1

SIZE-A1

Apr 03, 2017 – 6:37pm

FORMAT SIZE A1

COPY RIGHT AND CONFIDENTIAL
The information contained in this document is the property of BHARAT HEAVY ELECTRICALS LIMITED
it must not be used directly or indirectly in any way detrimental to the interest of the company.

CAD FILE NAME: E:\NSPCL_BSP\BASIC ENGG\GA OF CONVEYORS\CONV 10\R01\GA & LOAD DATA

FIRST ANGLE PRJECTION

ALL DIMENSIONS ARE IN MM

DRAWING NO. IS-1-GA-708-101-M020

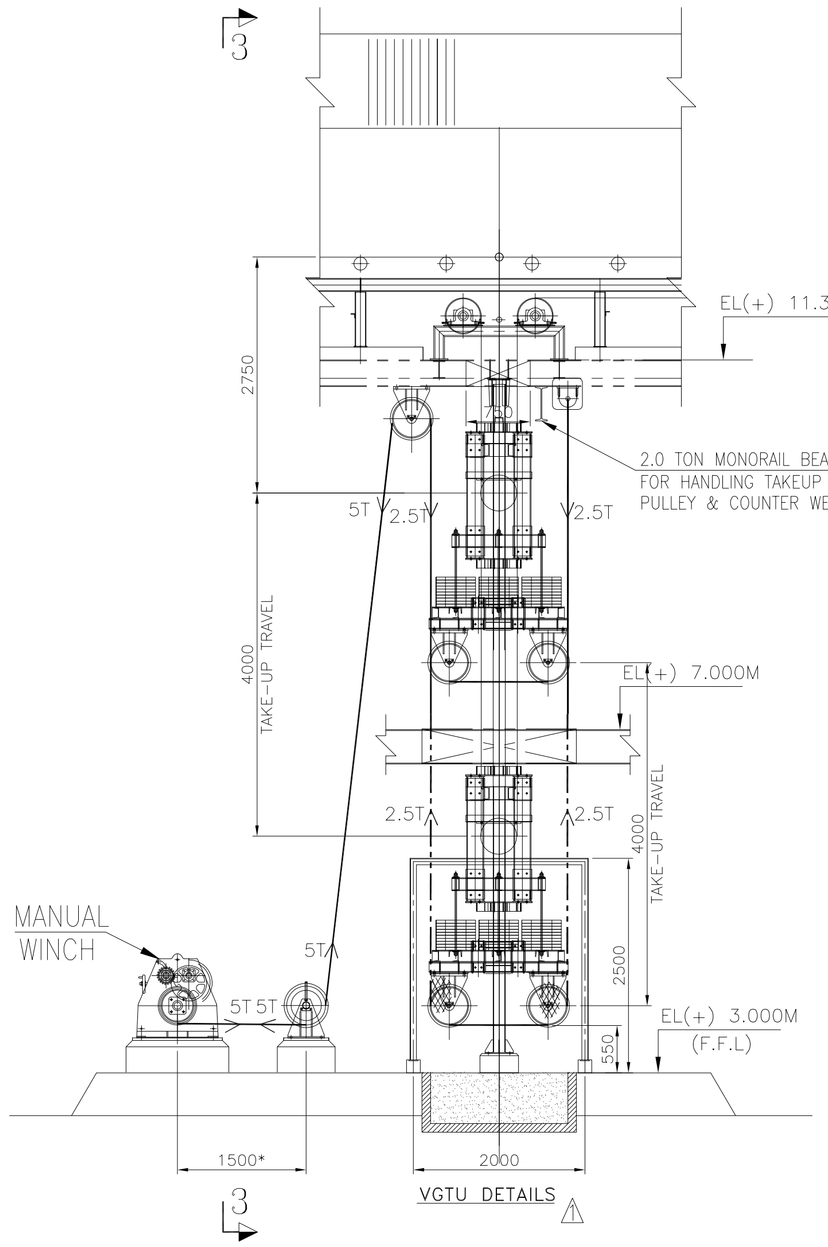

VGTU DETAILS

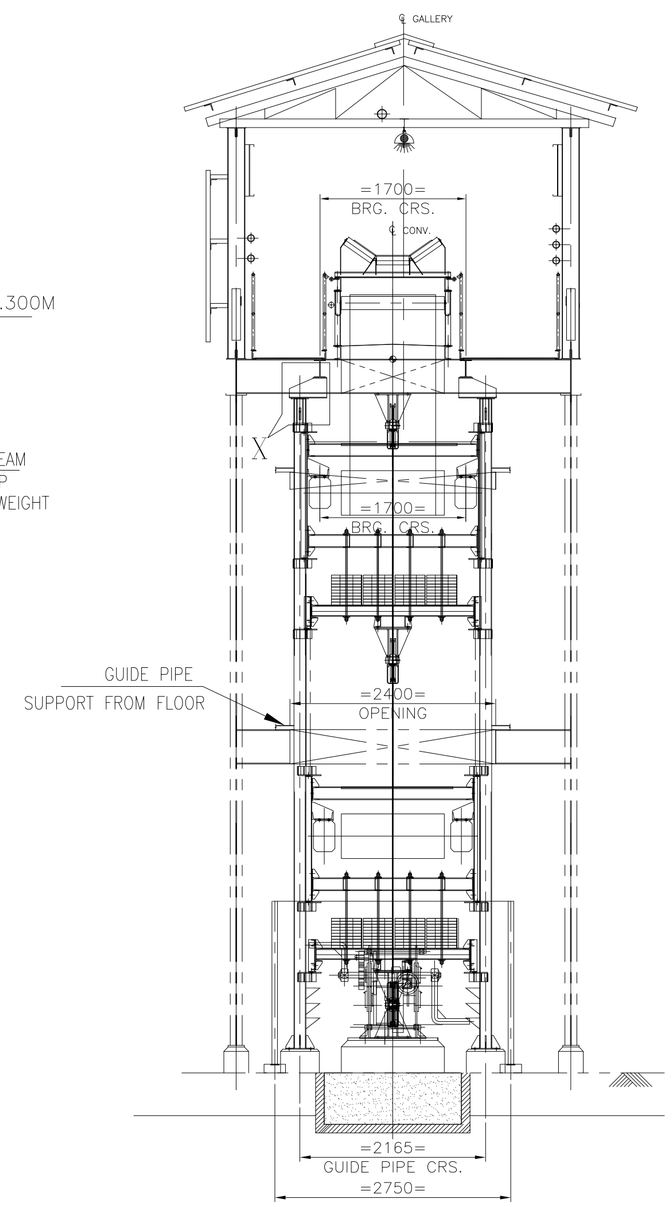

VIEW 3–3

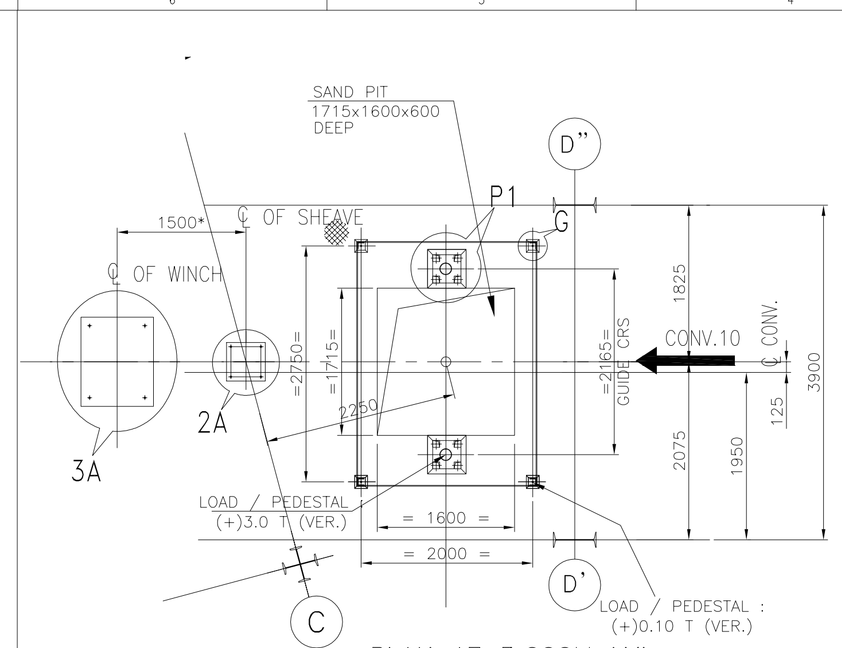

PLAN AT 3.000M LVL

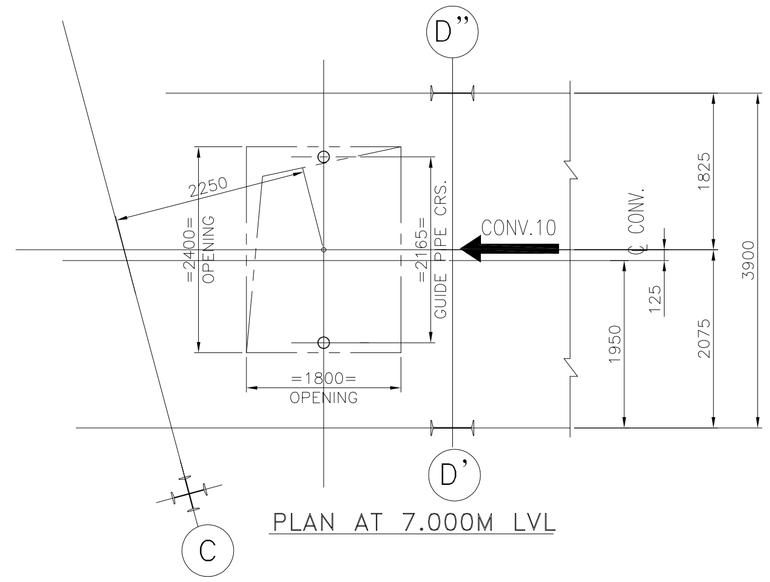

PLAN AT 7.000M LVL

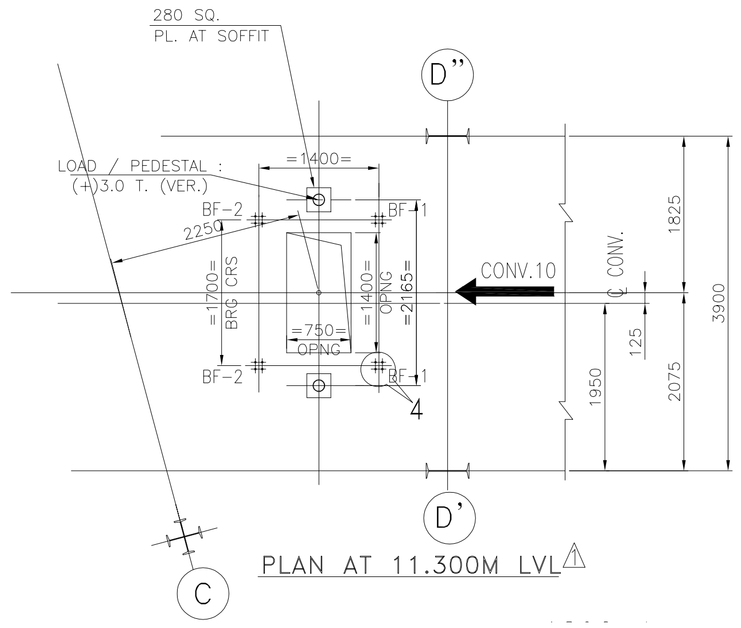

PLAN AT 11.300M LVL

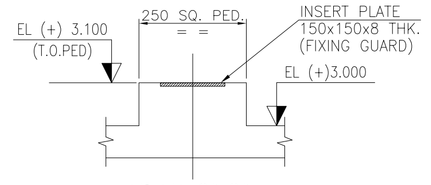

VIEW : 3A-3A

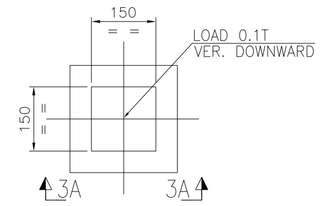

DETAIL-G

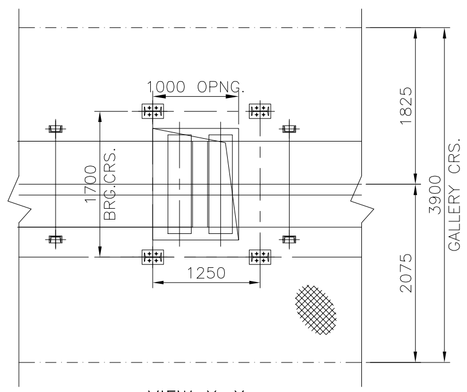

VIEW X–X
BELT CHANGING ROLLER

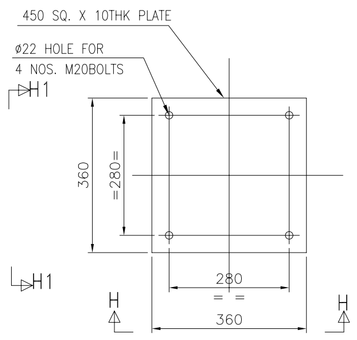

DETAIL –2A

HOLD

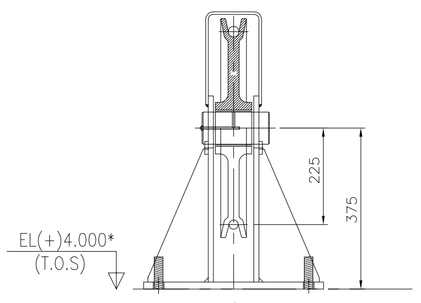

VIEW H1–H1

HOLD

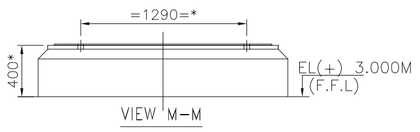

VIEW M–M

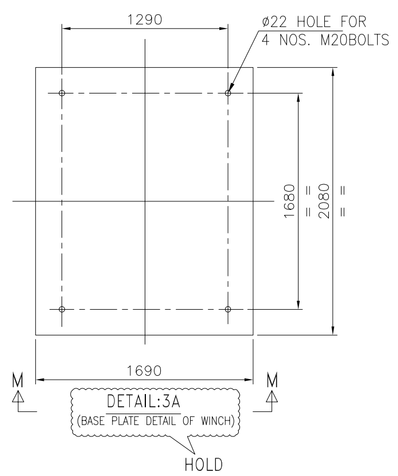

HOLD

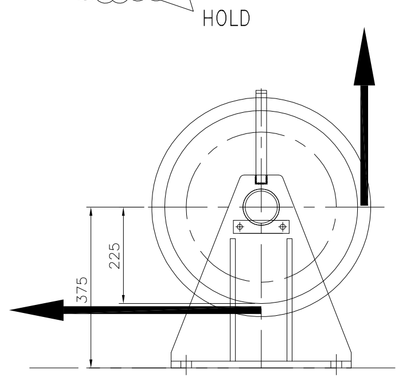

VIEW H–H

HOLD

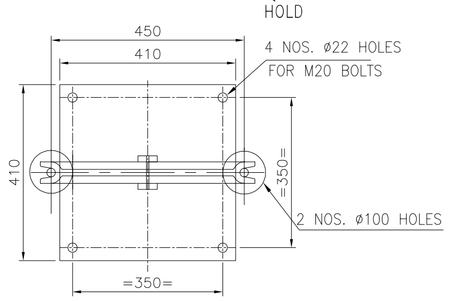

DETAIL–4A

HOLD

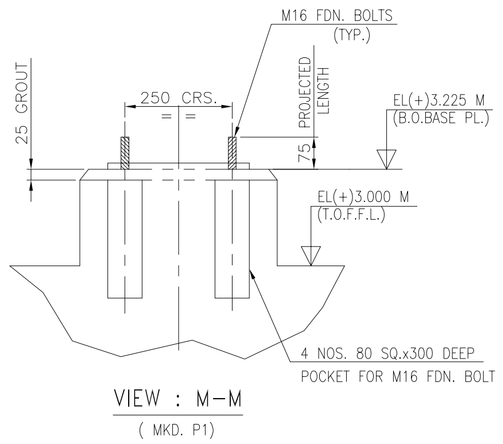

VIEW : M–M
(MKD. P1)

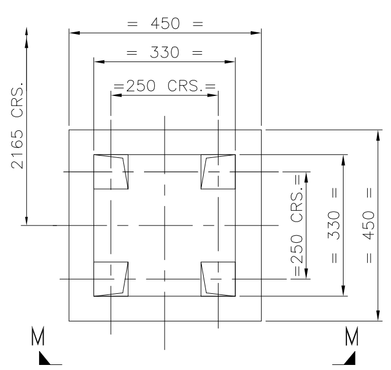

DETAIL OF PEDESTAL
MKD. P1
(FOR TAKE-UP GUIDE RODS)

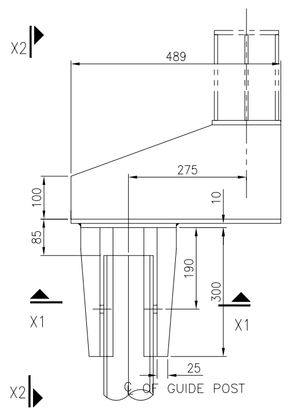

ENLARGED DETAIL AT 'X'

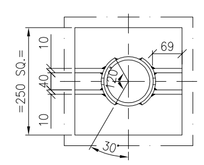

VIEW : X1 – X1

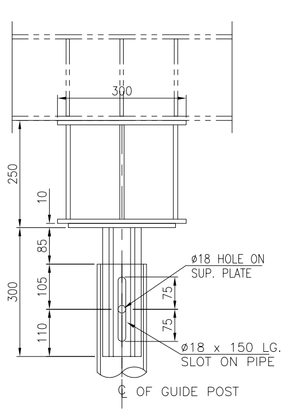

VIEW : X2 – X2

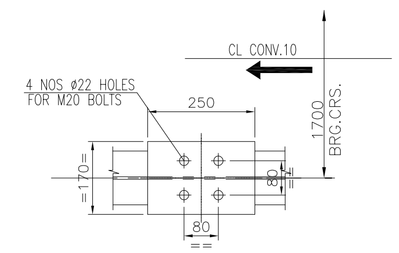

DETAIL–'4'

NOTES:–

1. ALL DIMENSIONS ARE IN MM & LEVELS ARE IN METERS.
2. READ THIS DRG IN CONJUNCTION WITH SHEET 2 OF 5, TO 5 OF 5.

REV	DATE	BRIEF RECORD	DRN	CHD	APP
1	31-3-17	REVISED AS PER MECON COMMENTS DATED-18-3-17	J.S	S.J	V.J

PROJECT : ROURKELA PP-II EXPANSION PROJECT (1X250 MW)

OWNER: NTPCL — NTPC-SAIL POWER COMPANY PVT. LTD.

CONSULTANT: MECON LIMITED मेकॉन लिमिटिड

BHARAT HEAVY ELECTRICALS LTD
INDUSTRIAL SYSTEMS GROUP, BANGALORE

	NAME	SIGN	DATE
DRN.	R.S		12-1-17
DESN.	S.J		13-1-17
CHD.	RSP		14-1-17
APP.	VSD		15-1-17

NO. OF VAR

TITLE : GA AND LOAD DATA OF BCN-10

NO. OF SHEETS: 05

SHEET. NO. 05

SCALE | BHEL JOB NO. | BHEL-ISG DRG. NO.: IS-1-GA-708-101-M020 | REV. 1

SIZE-A1

Apr 03, 2017 – 6:35pm
FORMAT SIZE A1

CAD FILE NAME: E:\NSPCL_RSP\BASIC ENGG\GA OF CONVEYORS\CONV 10\R01\GA & LOAD DATA
COPY RIGHT AND CONFIDENTIAL
The information contained in this document is the property of BHARAT HEAVY ELECTRICALS LIMITED it must not be used directly or indirectly in any way detrimental to the interest of the company.